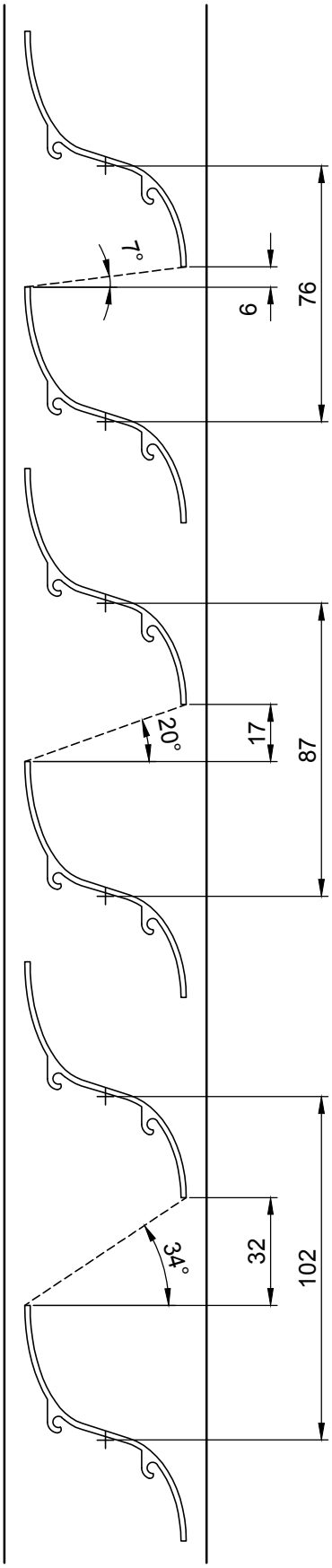

MODULES for fin
S 70X48

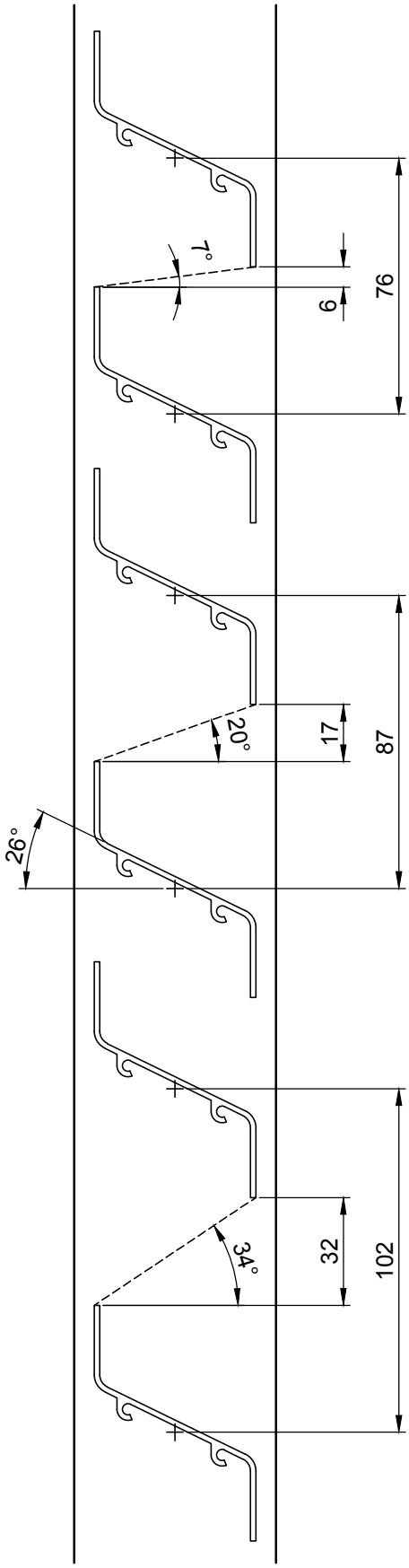

MODULES for fin
Z 70X48

HunterDouglas Architectural

Drwg.No.	Date: 8-11-2016	Scale: 1:2
SC-SS-flat bar-2D-01	Size: A4	Rev: 01
Subject: Sliding Shutters flat bar		

TOP VIEW

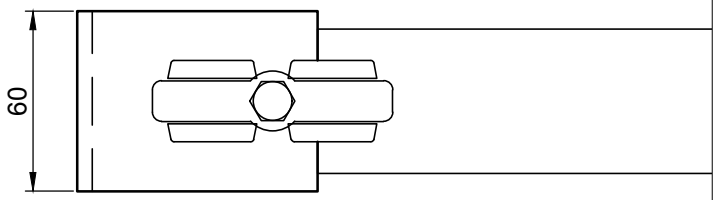

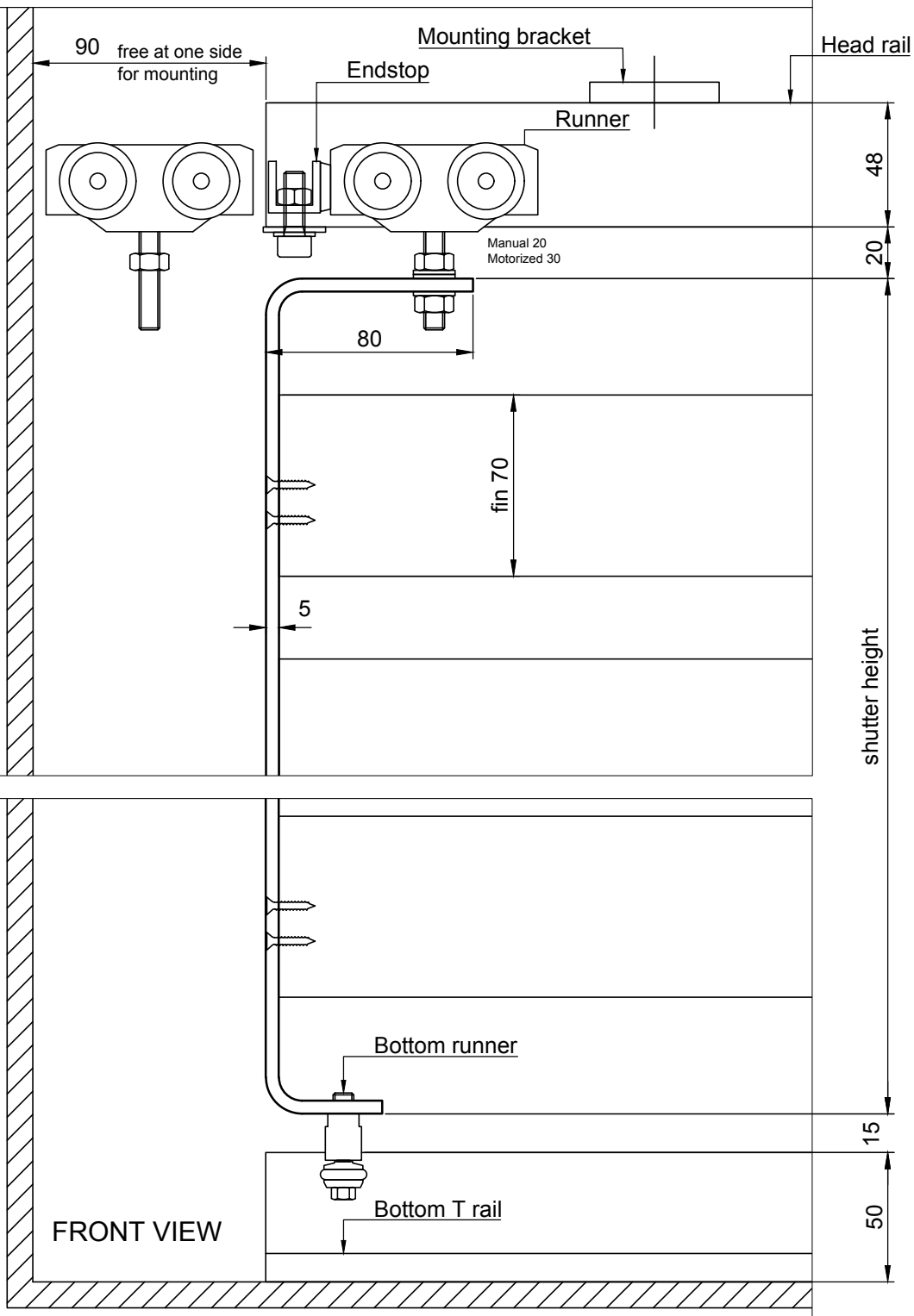

FRONT VIEW

HunterDouglas Architectural

Drwg.No. SC-SS-flat bar-2D-02	Date: 8-11-2016	Scale: 1:2,5
	Size: A4	Rev: 01
Subject: Sliding Shutters flat bar		

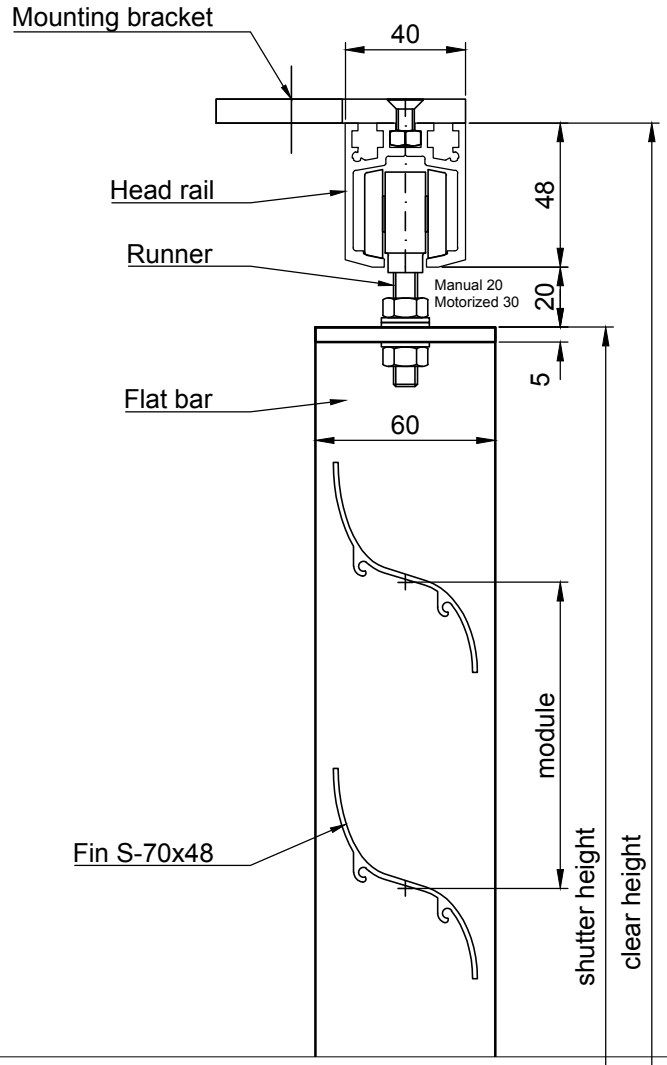

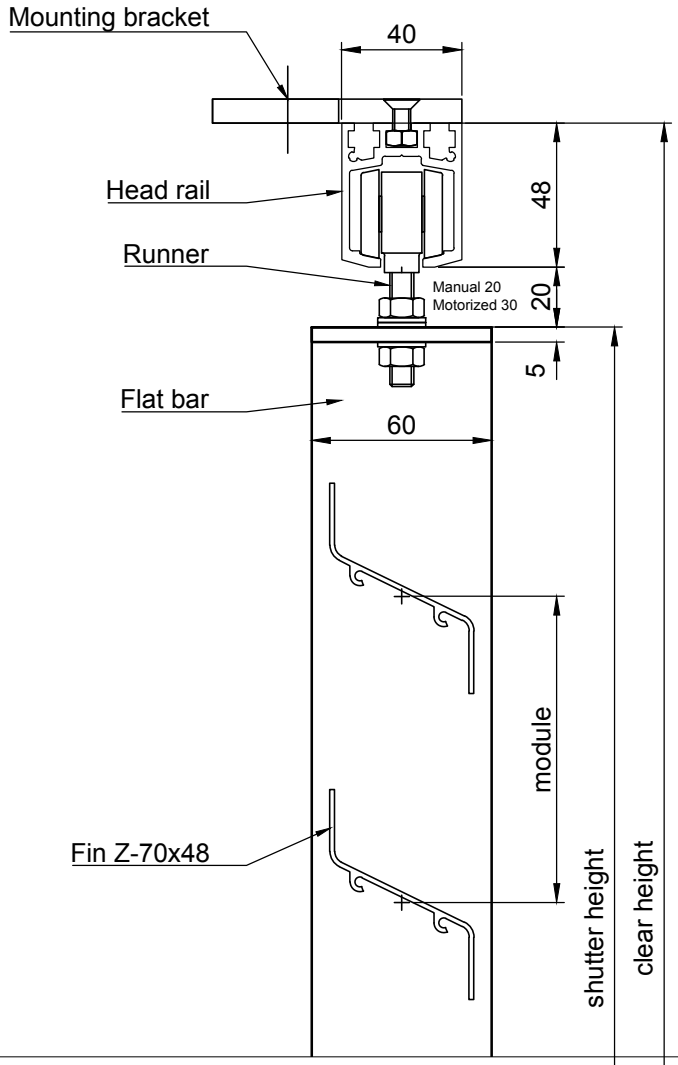

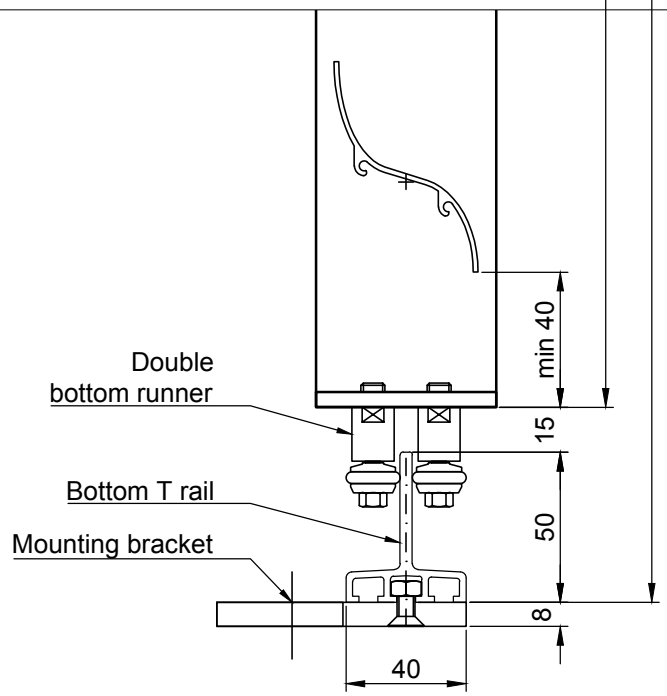

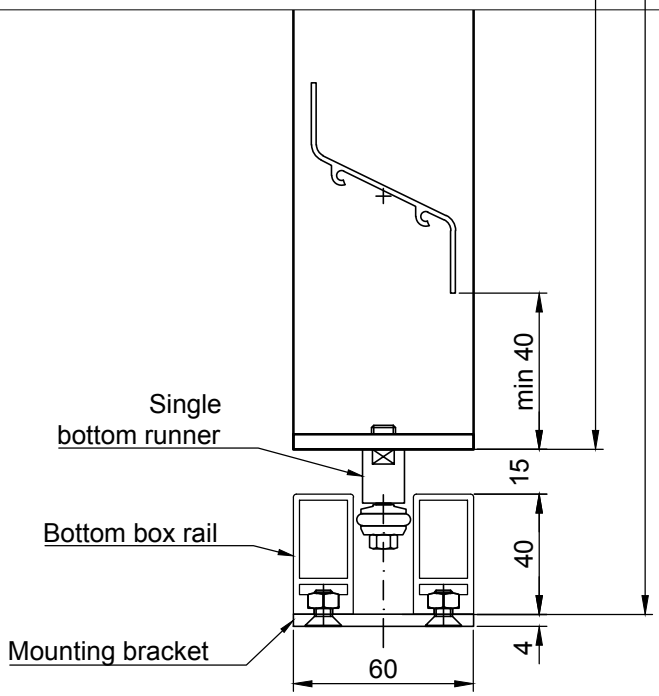

HunterDouglas Architectural

Drwg.No. SC-SS-flat bar-2D-03	Date: 8-11-2016	Scale: 1:2,5
	Size: A4	Rev: 01
Subject: Sliding Shutters flat bar		